Team Description Paper: HuroEvolutionTN Humanoid Robot for RoboCup 2016 Humanoid League

Chung-Hsien Kuo, Yi-Cheng Chen, An-Hung Chang, Ming-Liang Gao, and Po-Cheng Huang

Department of Electrical Engineering,
National Taiwan University of Science and Technology,
43 Sec. 4, Keelung Rd, 106 Taipei, Taiwan
{chkuo, m10407303, b10207124, b10207005, b10232031}@mail.ntust.edu.tw

Abstract. HuroEvolutionTN is a teen size humanoid robot that was made at National Taiwan University of Science and Technology. In this paper a teen-size humanoid robot, named HuroEvolutionTN, is developed for the purpose of participating in the RoboCup soccer games. The HuroEvolution is 95 centimeter in height and 12 kilogram in weight, and it is simply configured with 21 degrees of freedom, where 12 degrees of freedom are used for two lower limbs, 6 degrees of freedom are used for two arms, two degrees of freedom are used for the head camera, and one degree of freedom is used for the waist. Each leg is designed as a parallel mechanism structure to reduce the backlash effects of gear motors, as well as to reduce the uses of gear motors. The HuroEvolutionTN is capable of omni-walking with respect to different locomotion parameters. Moreover, a specialized turning locomotion is also generated to change the robot's heading based on a limited degrees of freedom of the leg structure. The image recognition and localization approaches are also applied for navigating the HuroEvolutionTN to finish the match in competitions.

Keywords: teen-size humanoid robot, parallel mechanism, omni-walking.

1 Introduction

Autonomous biped humanoid robot researches are still challenging engineering problems. Developments of humanoid robots must consider complicated mechanical structure designs [1], locomotion [2], [3], localization [4] and autonomous navigation [5]. In general, it is quite challenging on the autonomy issues of locomotion and navigation for biped humanoid robots. Alternatively, the biped humanoid robot may hardly operate in completely unstructured environments with uneven terrains and unknown objects.

RoboCup is an annual competition for autonomous robot developers in academic society. The organization committee defines standard problems in a partial known unstructured environment, and the robots have to autonomously finish the missions and challenges in the competition. Robotic soccer games defined to simulate the competition environment are specified with a specific size which is reasonable to the robot's dimension.

The teen-size biped humanoid robot competition is one of the most challenging competitions. With the teen-size humanoid league, the robot has to finish 2 vs. 2 match and three technical challenges. In the 2 vs. 2 match, the game is originally like the real soccer. The ball is placed at the center point of a standard competition field. The robot must find the ball position, move approaching the ball, dribble the ball, and

make a score. Practically, the ball and goal positions are obtained in term of recognizing specific colors of ball, size-bars and goals.

Actually, the team of NTUST has been annually participated the RoboCup competition. Based on the experience, the NTUST RoboCup team can accomplish the challenges provided in the competition. The NTUST teen-size team believe that our robot is competitive enough to join and compete in RoboCup Teen-Size Competition.

2 Mechanical Design

The HuroEvolutionTN is a teen-size autonomous humanoid robot development for the RoboCup Humanoid league. The specifications of HuroEvolutionTN are defined according to the teen size humanoid league rule in RoboCup 2016. The HuroEvolutionTN is designed as a 21 degree-of-freedom robot, where 12 degrees of freedom are desired for the lower limb, 6 degrees of freedom are for the arm, 2 degrees of freedom are for the yaw direction and pitch direction of the active vision sensor on the neck, and 1 degree of freedom is for waist joint. The structure of the robot is constructed from aluminum alloy. For the purpose of reducing the weight, some parts are made from polymer materials. The whole body and structure design of the HuroEvolutionTN is shown in Fig. 1, and Table 1 lists overall specifications.

In order to reduce the backlash effect of the gear motor and light the weight of the robot, each leg is designed as a parallel structure mechanism. The backlash effect happened when the gear train converts the high speed-low torque output from the motor into the low speed-high torque input to the joints. However, the backlash strongly affects the accuracy of the locomotion control. Therefore, in the HuroEvolutionTN project, the parallel mechanism is proposed to reduce the effect.

Lightweight is another important issue in this project. The HuroEvolutionTN is actuated by several servo motors. Due to the servo motor provides limited torque, parallel mechanism is implemented to simplify the structure, as well as reduce the uses of the motors. At the same time, low weight also prevents the gear chain from damaged.

Because the specifically parallel mechanism is designed, the knees always move parallel with the hip. Therefore, HuroEvolutionTN sacrifices the ability of the pitch rotation. It is assumed that the HuroEvolutionTN always walks on the even field, the lack of the pitch rotation is acceptable.

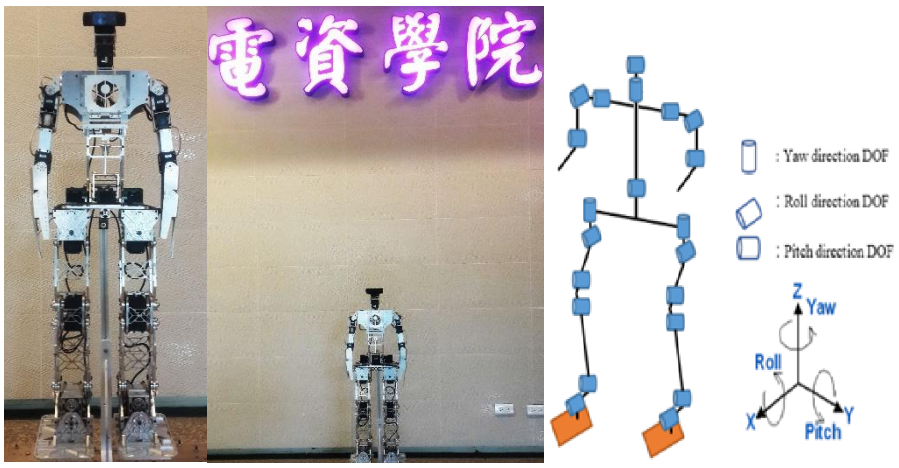

a b

Fig. 1. HuroEvolutionTN. (a) Whole Body, (b) Structure design.

Table 1. Specifications for HuroEvolutionTN Robot.

Height (cm)		95	
Weight (kg)		12	
DOF	Leg	12	
	Waist	1	
	Arm	6	
	Head	2	
Actuator		Robotis MX106	
		Robotis MX28	
		Robotis MX64	
Sensor		Logitech WebCam C920	
		Gyro Sensor	Razor 9-DOF
		Acceleration Meter	
Control System	Main Controller	Intel NUC Mini PC	
	Motion Controller	ATmega1281	

3 Control System

In order to achieve the optimal walking trajectory and the flexible locomotion performance, the omni-walking model is proposed in this project. In this project, the trajectory of the center of the hip is generated from the linear inverted pendulum model (LIPM) [6], [7], [8]. However, in order to achieve the trajectory of locomotion planning, the end position of each foot is required. The trajectory of the swing foot is generated from cycloid curve which is indicated in (1)-(3). The locomotion parameters are shown in Fig. 2. It is noted that X_s, Y_s and Z_s are the position of the swing foot; Length, Shift and Height are the desired strike length, the shift distance and the strike height; ρ is the time percentage of the period time when the foot reaches to the highest position; Ts is the period time.

On the other hand, at the center of the hip inside the robot is equipped with a gyro sensor to sense the rotation of the hip plane [9]. According to the angular velocity, the tilt movement of the robot can be determined. In this project, a proportional-differential controller is designed to generate the compensated torque, which stabilizes the walking motion. The K-P controller is indicated in (4) and (5). It is noted that θ_{pitch} is generated from the locomotion trajectory; ω_{pitch} and ω_{roll} are the measured angular velocity.

$$x_s(t)=\frac{Length}{2\pi}[2\pi\frac{t}{T_s}-\sin(2\pi\frac{t}{T_s})],\qquad 0\le t\le T_s \tag{1}$$

$$y_s(t)=\frac{Shift}{2\pi}[2\pi\frac{t}{T_s}-\sin(2\pi\frac{t}{T_s})],\qquad 0\le t\le T_s \tag{2}$$

$$z_s(t)=\begin{cases}\frac{Height}{2\pi}[2\pi\frac{t}{\rho T_s}-\sin(2\pi\frac{t}{\rho T_s})], & 0\le t\le \rho T_S\\ Height-\frac{Height}{2\pi}[2\pi\frac{t-\rho T_s}{(1-\rho)T_s}-\sin(2\pi)\frac{t-\rho T_s}{(1-\rho)T_s}], & \rho T_s<t<T_s\end{cases} \tag{3}$$

$$\theta_{outpitch}=\theta_{pitch}+\omega_{pitch}\times KP_{pitch}+\frac{d}{dt}\omega_{pitch}\times KD_{pitch} \tag{4}$$

$$\theta_{outroll}=\theta_{roll}+\omega_{roll}\times KP_{roll}+\frac{d}{dt}\omega_{roll}\times KD_{roll} \tag{5}$$

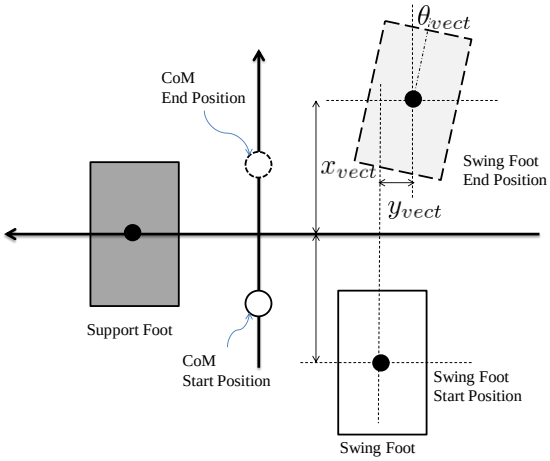

Fig. 2. The graphic symbols of the locomotion parameter.

The control system is developed to integrate the functions of locomotion control, image processing, image localization and serial communication. At the same time, a power supply and monitoring module is developed to deal with various voltage requirements of the onboard computer and gear motors, as well as to protect rechargeable batteries. An onboard computer (with type Intel NCU mini PC) is selected as the supervisory controller. The onboard computer is an x86 based platform with Intel Core i5, 1.3 GHz CPU and 4GB RAM. The 60 GB mini SATA-SSD is acted as a file storage device which contains a reduced Windows 7 operation system and a visual based reaction navigation program. The proposed control architecture is shown in Fig. 3.

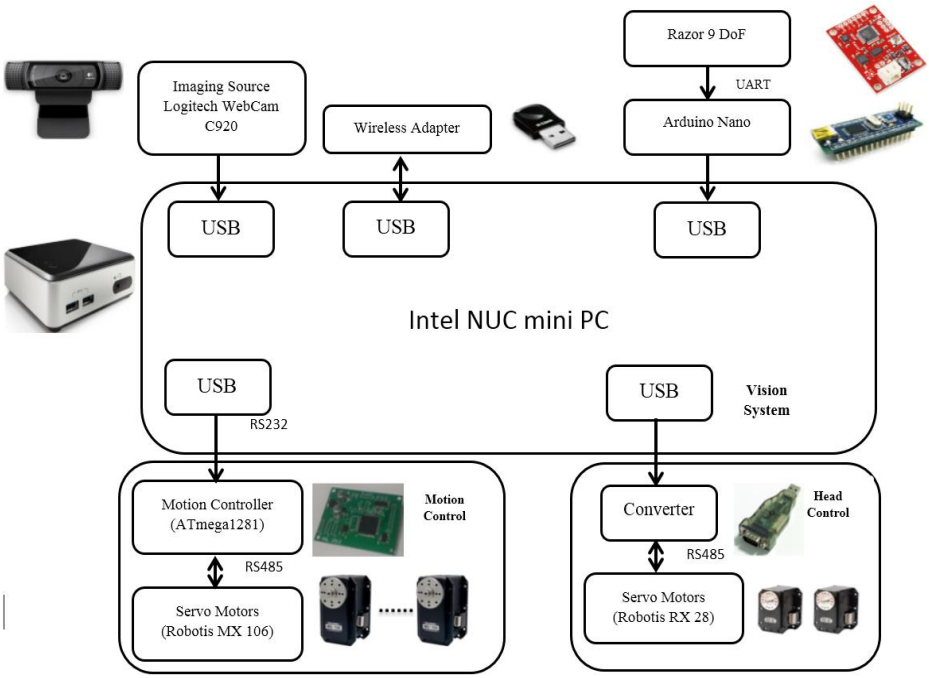

Fig. 3. Control architecture of HuroEvolutionTN robot.

4 Conclusion

This paper presents a teen size humanoid that is specially designed to participate in RoboCup 2016. The mechanical structure design, visual guided navigation and omni-walking locomotion have been described in this technical description paper. Based on the experience, NTUST Teen-Size RoboCup Team firmly believes, our robot is competitive to join RoboCup 2016.

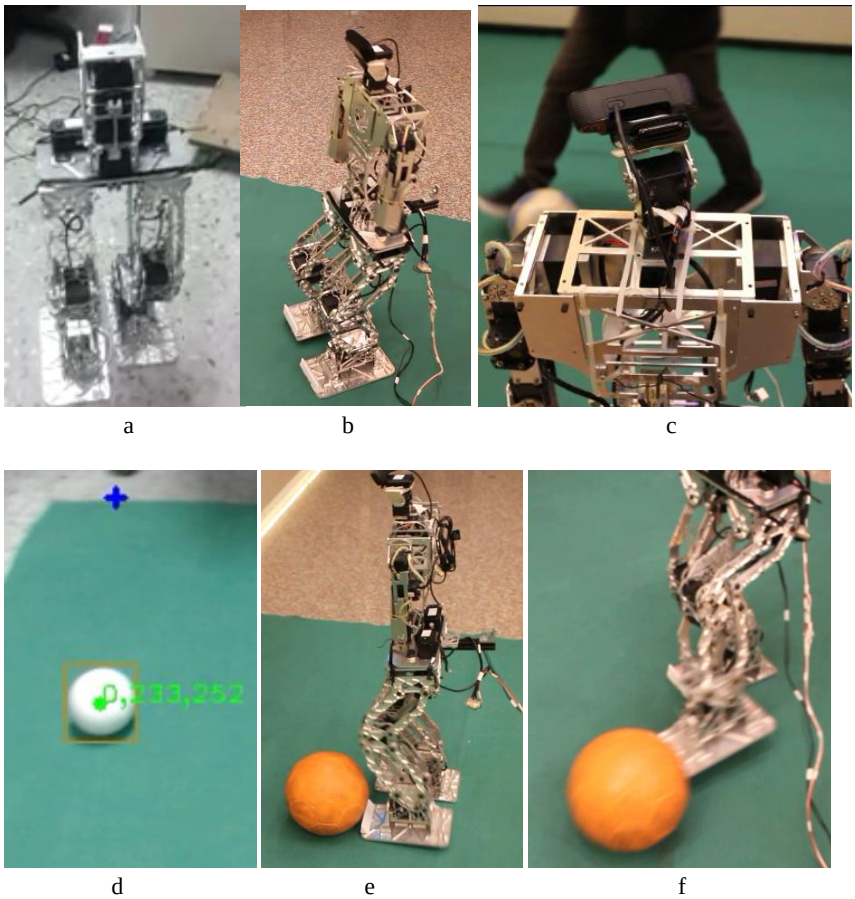

Fig. 4. Training Process: (a) Walking Training without Body. (b) Walking Training with Complete Body. (c) Tracking Ball Training. (d) White Ball Detection. (e) Dribbling Training. (f) Kicking Training

5 References

1. Kanehiro, F., Kajita, S., Yokoyama, K., Akachi, K., Kawasaki, T., Ota, S., Isozumi, T.: Design of Prototype Humanoid Robotics Platform for HRP. In: IEEE/RSJ International Conference on Intelligent Robots and Systems, Vol. 3, pp. 2431 – 2436, (2002)
2. Taga G., Yamaguehi Y., Shimizu H.: Self-Organized Control of Bipedal Locomotion by Neural Oscillators in Unpredictable Environment. In: Biological Cybernetics, vol. 159, pp. 147 – 159, (1991)
3. Kajita S., Yamaura T., Kobayashi A.: Dynamic Walking Control of a Biped Robot Along a Potential Energy Conserving Orbit. In: IEEE Transactions on Robotics and Automation, vol. 8, no. 4, pp. 431 – 438, (1992)
4. Minakata H., Hayashibara Y., Ichizawa K., Horiuchi T., Fukuta M., Fujita S., Kaminaga H., Irje K. Sakamoto H.: A method of single camera robocup humanoid robot localization using cooperation with walking control. In: 10th IEEE International Workshop on Advanced Motion Control, pp.50 – 55, (2008)
5. Khatib O.: Real-time obstacle avoidance for manipulators and mobile robots. In: International Journal on Robotics Research, vol. 5, no. 1, pp.90 – 98, (1986)
6. Kajita S., Kanehiro F., Kaneko K., Fujiwara K.: A Realtime Pattern Generator for Biped Walking. In: IEEE International Conference on Robotics and Automation, pp. 31 – 37, (2002)
7. Dau V. H., Chew C. M., Poo A. N.: Planning Bipedal Walking Gait Using Augmented Linear Inverted Pendulum Model. In: IEEE Conference on Robotics, Automation and Mechatronics, no. 1, pp. 575 – 580, (2010)
8. Motoi N., Suzuki T., Ohnishi K.: A Bipedal Locomotion Planning Based on Virtual Linear Inverted Pendulum Mode. In: IEEE Transactions on Industrial Electronics, vol. 56, no. 1, pp. 54 – 61, (2009)
9. Faber F., Behnke S.: Stochastic Optimization of Bipedal Walking Using Gyro Feedback and Phase Resetting. In: IEEE International Conference on Humanoid Robots, pp. 203 – 209, (2007)